Schäffer



NEW: 16e T

WEIGHT	HEIGHT	WIDTH	LIFTING HEIGHT	OUTPUT	BATTERY
1,500 kg	1,990 mm	890 mm+	2,830 mm	9.6 kW	12.2 kWh

The new 16e T telescopic wheel loader: Zero emissions. Greater lift height. More possibilities.

- Compact electric-powered tele wheel loader: **2.83 m lift height** with minimal space requirements, **emission-free** and **with no compromise on manoeuvrability.**
- Extremely compact design: With a width starting from 0.89 m and a height of 1.99 m, **perfect for tight stables, narrow entryways and low buildings.**
- Powerful, **robust Schäffer axles:** Greater thrust, improved traction and longer service life than with wheel motors, plus less maintenance and more reliability.
- 9.6 kW electric motor: Powerful performance with no emissions or noise, **ideal for working right next to the animals.**
- 48 V lithium-ion battery with a capacity of 12.2 kWh: Can be charged via a wallbox or the domestic mains supply, including using electricity **generated by your own solar panels or biogas system.**
- Hydraulic performance of 28 l/min and an extensive range of attachments: **Maximum versatility** for daily operations.
- **Simple, intuitive operation:** Ideal for farms where several people use the machine; extensive training is not required.
- **Maximum manoeuvrability** – Efficient operation even in tight spaces saves time and reduces manoeuvring effort.

MADE FOR MORE.



16e T

Technical data, dimensions

	16e T
Engine	Electric motor, 9.6 kW
Drive unit	Hydrostatic four wheel drive with automotive control
Battery	Li-Ion battery pack, 48 V / 12.2 kWh
Charging system	On-board charger with Type 2 connector enables charging at a 230V power outlet or a wallbox
Tyres	23 x 8.5 -12 AS Option I 23 x 8.5 -12, SKD/MultiTrac Option II 23 x 10.5 -12, AS/MultiTrac
Service braking system	Hydrostatic
Parking brake	Mechanical drum brake
Working hydraulics Output/pressure	Delivery rate: 28 l/min Operating pressure: 200 bar
Steering	Fully hydraulic articulated/swivel steering
Operating weight	1,500 kg
Lifting capacity	810 kg
Tipping load, straight*1	575 kg
Axles	Original Schäffer axles, 5 wheel nut rim
Speed	16 km/h
Electric system	Operating voltage: 12 V
Tank capacity	Hydraulic oil: 22 l
Sound pressure level LpA	71 dB(A)
Sound power level guaranteed LwA equivalent LwA	 99 db(A) 90 db(A)
Hand/arm vibration*2	< 2.5 m/s²
Total body vibration*2	< 0.5 m/s²

		16e T
A	Wheelbase [mm]	1,345
B	Chassis length [mm]	2,770
C	Overall length with standard bucket [mm]	3,150
D	Digging depth [mm]	80
E	Reach [mm]	1,400
F	Max. bucket pivot point [mm]	2,830
G	Loading height with pallet forks [mm]	2,580
H	Max. dumping height [mm]	1,940
I	Front end height [mm]	1,390
J	Dumping width [mm]	405
K	Seat height [mm]	1,010
L	Cab height [mm]	1,990
M	Swivelling point, telescopic arm retracted [mm]	2,320
N	Overall width [mm]	890 - 1,060
O	Inner turning radius [mm]	970
P	Outer turning radius [mm]	1,875
Q	Outer radius with standard bucket [mm]	2,290

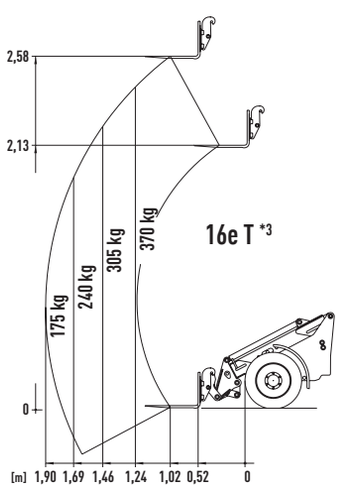

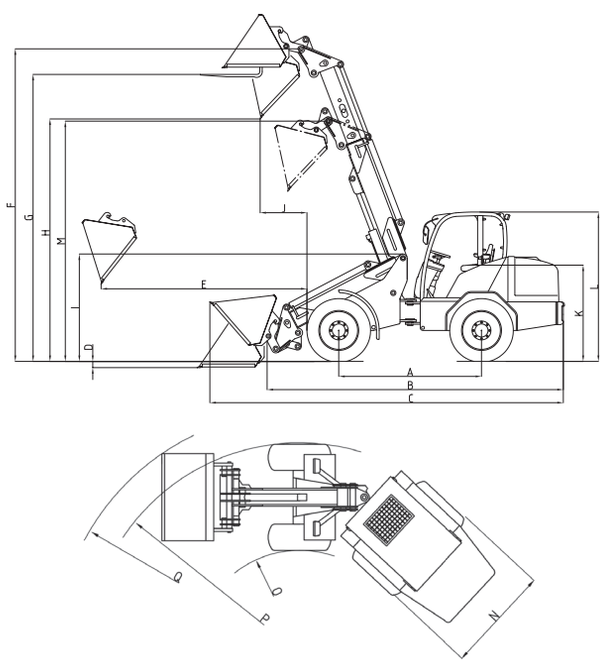

*1 boom horizontal, not extended, with pallet fork (acc. to ISO 14397) *2 according to ISO 8041

*3 payload diagram using forks on stable underground (according EN 474-3)

Tyre dimensions and additionals equipment can change the operating weight, tipping load and payload.

0.5/11.26/WD. Technical changes reserved. Dimensions are approximate. In some cases, illustrations show models and/or attachments with custom designs.